IZTECH – Department of Electrical and Electronics Engineering

EE313 – ELECTRONICS II

HOMEWORK 2 REPORT

FILTER DESIGN FOR SPECIFIED SIGNAL

Name: Zekiye Ayperi TATAR

Number: 310206043

Submission Date: 14.01.2026

Objective

To design linear time-invariant (LTI) systems that act as a specific filter for a specific frequency request.

Method

The continuous-time signal that was asked to be observed was given as:

$$x(t) = \sin(2\pi f_1 t) + \sin(2\pi f_1 t) + \sin(2\pi f_1 t)$$

where f_1 = 500 Hz, f_2 = 2 kHz, f_3 = 10 kHz. To isolate a specific frequency, the goal was to pass the desired component with small loss while attenuating the others sufficiently. Observing the given frequencies and the relationships between them, it was determined that a low-pass (LP) filter would be used for the lowest frequency 500 Hz, a high-pass (HP) filter would be used for highest frequency 10 kHz, and a band-pass filter would be used for midband frequency 2 kHz.

Low–Pass (LP) Filter:

A general two–pole LP filter design was selected. The two resistor values were assumed to be equal for easier calculations. Magnitude of the transfer function was found, then by using Butterworth filter condition and cutoff frequency occurrence information, the final form of magnitude formula was found as:

$$|T| = \frac{1}{\sqrt{1 + (\frac{f}{f_{3dB}})^4}}$$

To lessen the loss at the cutoff frequency, the criteria of the loss at 500 Hz to be less than 1 dB, which meant that approximately 89% of the amplitude would remain. By using the magnitude formula for f = 500, the cutoff frequency condition was found to be greater than 700 Hz. A popular design choice of C = 10 nF and R = 22 kΩ was made, which gave a cutoff frequency of 723 Hz, which satisfied the condition. By making necessary calculations, the values for all the components were found. To make sure the design was working correctly, three frequencies were put in the filter's magnitude formula, which resulted in small loss at 500 Hz, and big loss at 2 kHz and 10 kHz – which was exactly the result wished to be observed.

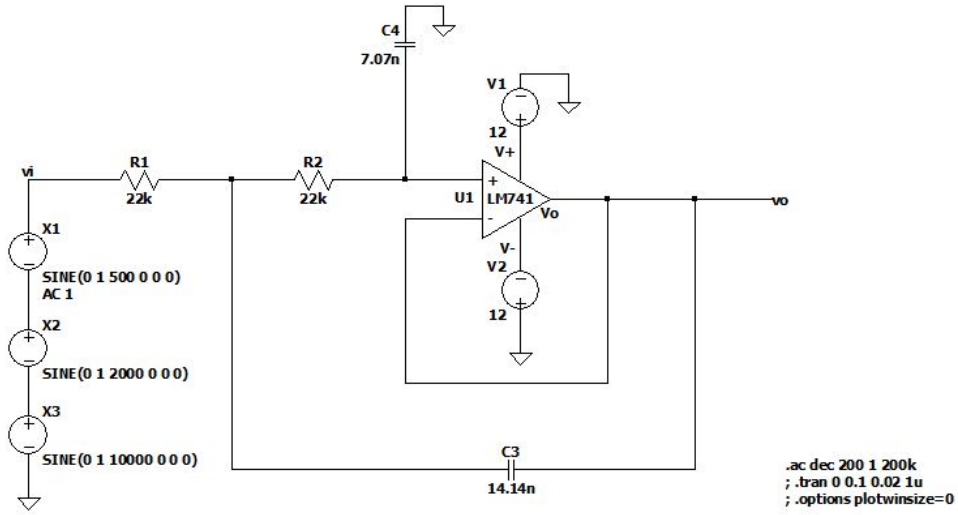

Figure 1: The schematic for LP filter

The schematic in Figure 1 was drawn in LTspice with values found in calculations. The SPICE directive ".ac dec 200 1 200k" was added to perform an AC small-signal frequency sweep and obtain the filter's Bode (magnitude and phase) response. The simulation was run and the trace "V(vo) / V(vi)" was added to observe the Bode plot of the filter in Figure 7.

High–Pass (HP) Filter:

A general two-pole HP filter design was selected. From the magnitude transfer function formula, RC constant value was calculated for cutoff frequency 10 kHz. By assuming of C = 1 nF, resistor values were calculated. The checkup for losses was made again, where there were small loss for 10 kHz and big loss for others – exactly as it should be.

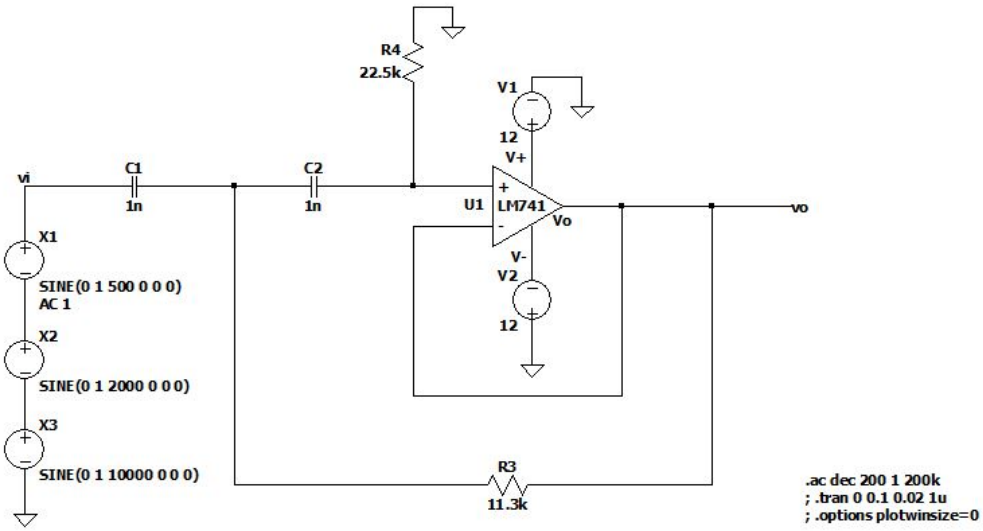

Figure 2: The schematic for HP filter

The HP filter schematic in Figure 2 was drawn in LTspice with values found in calculations. SPICE directive ".ac dec 200 1 200k" was added for AC small-signal analysis. The schematic was run and "V(vo) / V(vi)" trace was added to observe the Bode plot, as it can be seen in Figure 8.

Band–Pass Filter:

An active bandpass filter with three op-amps was designed. In the circuit, the outputs were labelled as "vo1", "vo2", and "vo3" where they represent main bandpass output, buffered stage output, and final amplifier stage output respectively. By building relations between output nodes and the knowledge of central frequency of passband, the relations between maximum gain, bandwidth and resistors were found. Assuming the two resistance duos to be equal between them, the values ofr resistances were found.

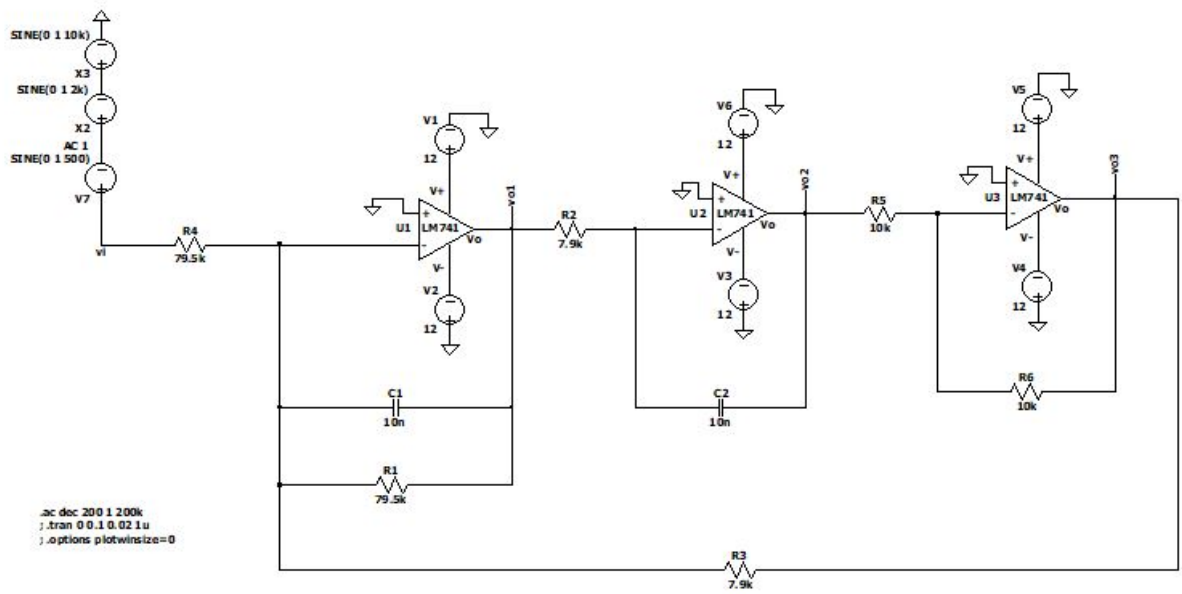

Figure 3: The schematic for bandpass filter

The schematic in Figure 3 was drawn in LTspice with the values found in calculations. The values of R_5 and R_6 were chosen as equal to keep unity magnitude gain. The SPICE directive ".ac dec 200 1 200k" was used for AC small-signal analysis, and then the Bode plot figure was plotted by using the "V(vo1) / V(vi)" trace, which can be seen in Figure 9.

Calculations

$$x(t) = \sin(2\pi f_1 t) + \sin(2\pi f_2 t) + \sin(2\pi f_3 t) \longrightarrow \begin{cases} y_1(t) \approx \sin(2\pi f_1 t) \longrightarrow \text{Low-Pass Filter} \\ y_2(t) \approx \sin(2\pi f_2 t) \longrightarrow \text{Band-Pass Filter} \\ y_3(t) \approx \sin(2\pi f_3 t) \longrightarrow \text{High-Pass Filter} \end{cases} \Bigg\} \text{Butterworth}$$

$f_1 = 500$ Hz , $f_2 = 2$ kHz , $f_3 = 10$ kHz

LOW-PASS FILTER

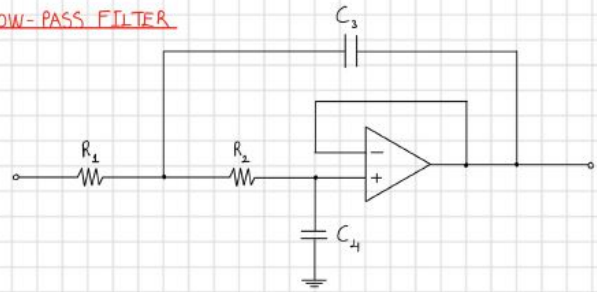

$$T(s) = \frac{G_1 G_2}{G_1 G_2 + sC_4(G_1 + G_2 + sC_3)}$$

$$\left.\begin{array}{l} s = j\omega = 0 \Rightarrow T(s=0) = \dfrac{G_1 G_2}{G_1 G_2} = 1 \\ s = j\omega \to \infty \Rightarrow T(s \to \infty) \to \infty \end{array}\right\} \text{acts like low-pass}$$

Assumption: $G_1 = G_2 = 1/R$ $(R_1 = R_2 = R)$

$$T(s) = \frac{\frac{1}{R^2}}{\frac{1}{R^2} + sC_4\left(\frac{2}{R} + sC_3\right)} = \frac{1}{1 + sRC_4(2 + sRC_3)}$$

$$\begin{array}{l} \tau_3 = RC_3 \\ \tau_4 = RC_4 \end{array} \Rightarrow T(j\omega) = \frac{1}{1 + j\omega\tau_4(2 + j\omega\tau_3)} = \frac{1}{(1 - \omega^2\tau_3\tau_4) + j2\omega\tau_4} \Rightarrow |T(j\omega)| = \sqrt{\frac{1}{(1 - \omega^2\tau_3\tau_4)^2 + (2\omega\tau_4)^2}}$$

→ For a Butterworth filter, $\frac{d}{d\omega}|T(j\omega)|\Big|_{\omega=0} = 0$.

$$\frac{d}{d\omega}|T(j\omega)| = -\frac{1}{2}\cdot\frac{8\omega\tau_4^2 - 4\omega\tau_3\tau_4(1 - \omega^2\tau_3\tau_4)}{\left[(1 - \omega^2\tau_3\tau_4)^2 + (2\omega\tau_4)^2\right]^{3/2}} \Rightarrow \frac{d}{d\omega}|T(j\omega)|\Big|_{\omega=0} = 0 = \cancel{8\omega}\tau_4^2 - \cancel{4\omega}\tau_3\tau_4(1 - \omega^2\tau_3\tau_4) \Rightarrow 2\tau_4^{\cancel{2}} = \tau_3\cancel{\tau_4} - \cancel{\omega^2\tau_3^2\tau_4^2} \Rightarrow \begin{array}{l} 2\tau_4 = \tau_3 \\ 2C_4 = C_3 \end{array}$$

$$\begin{array}{l} \tau_3 = 2\tau_4 \\ C_3 = 2C_4 \end{array} \Rightarrow |T| = \sqrt{\frac{1}{(1 - \omega^2 2\tau_4^2)^2 + (2\omega\tau_4)^2}} = \sqrt{\frac{1}{1 - \cancel{\omega^2 4\tau_4^2} + \omega^4 4\tau_4^4 + \cancel{\omega^2 4\tau_4^2}}} = \sqrt{\frac{1}{1 + 4(\omega\tau_4)^4}}$$

$C_4 = 0.707\,C$
$C_3 = 1.414\,C$

→ Cutoff frequency occurs when

$$|T| = \sqrt{\frac{1}{1 + 4(\omega\tau_4)^4}} = \sqrt{\frac{1}{2}} \Rightarrow \begin{array}{l} 1 + 4(\omega_{3dB}\tau_4)^4 = 2 \\ 4(\omega_{3dB}\tau_4)^4 = 1 \end{array} \Rightarrow \omega_{3dB} = 2\pi f_{3dB} = \frac{1}{\sqrt{2}\,\tau_4} = \frac{1}{\sqrt{2}\,RC_4} \Longrightarrow |T| = \frac{1}{\sqrt{1 + (f/f_{3dB})^4}}$$

→ If we take $f_{3dB} = 500$ Hz, it becomes the border of cutoff which might result in a big loss in output. To lessen the effect, our criteria will be to make loss at 500 Hz to be less then 1 dB.

$$20\log_{10}(|T(500)|) \geq -1 \Rightarrow |T(500)| \geq 10^{-\frac{1}{20}} \approx 0.891 \longrightarrow \text{genliğin \%89.1'i kalıyor}$$

$$|T(500)| = \frac{1}{\sqrt{1 + \left(\frac{500}{f_{3dB}}\right)^4}} \geq 0.891 \Rightarrow \frac{1}{0.891} \geq \sqrt{1 + \left(\frac{500}{f_{3dB}}\right)^4} \Rightarrow \frac{1}{(0.891)^2} - 1 \geq \left(\frac{500}{f_{3dB}}\right)^4 \Rightarrow \frac{1}{f_{3dB}} \leq \sqrt[4]{\frac{1}{(0.891)^2} - 1}\cdot\frac{1}{500} \Rightarrow f_{3dB} \geq \sim 700 \text{ Hz}$$

Assumption: $C = 10$ nF , $R = 22$ kΩ (two popular design choices)

$$f_{3dB} = \frac{1}{2\pi RC} = \frac{1}{2\pi(22 \times 10^3)(10 \times 10^{-9})} \Rightarrow f_{3dB} \approx 723.43 > 700 \text{ Hz} \checkmark$$

$R_1 = R_2 = 22$ kΩ
$C_4 = (0.707)(10\text{ nF}) = 7.07$ nF , $C_3 = 14.04$ nF

Checking for 500 Hz , 2 kHz , 10 kHz;

$$|T| = \frac{1}{\sqrt{1 + \left(\frac{f}{723}\right)^4}}$$

$$f = 500 \text{ Hz} \Rightarrow |T| = \frac{1}{\sqrt{1 + \left(\frac{500}{723}\right)^4}} = 0.902 \Rightarrow 20\log_{10}(0.902) = -0.895 \text{ dB} \quad \text{small loss} \checkmark$$

$$f = 2 \text{ kHz} \Rightarrow |T| = \frac{1}{\sqrt{1 + \left(\frac{2000}{723}\right)^4}} = 0.130 \Rightarrow 20\log_{10}(0.130) = -17.75 \text{ dB} \quad \text{big loss} \checkmark$$

$$f = 10 \text{ kHz} \Rightarrow |T| = \frac{1}{\sqrt{1 + \left(\frac{10000}{723}\right)^4}} = 5.227 \times 10^{-3} \Rightarrow 20\log_{10}(5.227 \times 10^{-3}) = -45.63 \text{ dB} \quad \text{big loss} \checkmark$$

Figure 4: The calculations for LP filter

HIGH - PASS FILTER

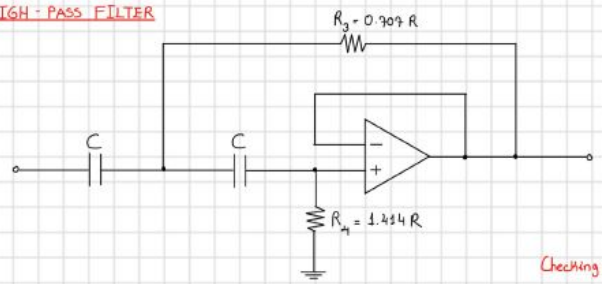

$$|T| = \frac{1}{\sqrt{1+\left(f_{3dB}/f\right)^4}}$$

$$\omega_{3dB} = \frac{1}{RC} \Rightarrow RC = \frac{1}{2\pi f_{3dB}} = \frac{1}{2\pi(10\times10^3)} \cong 15.915\ \mu s$$

Assumption: $C_1 = C_2 = C = 1\ nF$

$$R = \frac{RC}{C} = \frac{15.915\times10^{-6}}{1\times10^{-9}} = 15.915\ k\Omega$$

$$R_3 = (0.707)(15.915\times10^3) = 11.252\ k\Omega \approx 11.3\ k\Omega$$

$$R_4 = (1.414)(15.915\times10^3) = 22.504\ k\Omega \approx 22.5\ k\Omega$$

Checking:

$f = 500\ Hz \Rightarrow |T| = 2.5\times10^{-3} \rightarrow 20\log_{10}(|T|) = -52\ dB$ big loss ✓

$f = 2\ kHz \Rightarrow |T| = 0.04 \rightarrow 20\log_{10}(|T|) = -28\ dB$ big loss ✓

$f = 10\ kHz \Rightarrow |T| = 0.707 \rightarrow 20\log_{10}(|T|) = -3\ dB$ small loss ✓

Figure 5: The calculations for HP filter

BAND-PASS FILTER

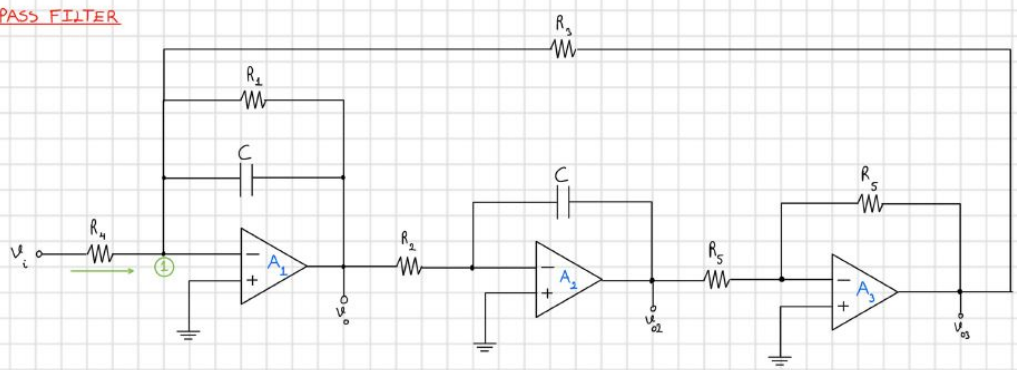

$$\frac{V_{o2}}{V_o} = -\frac{\frac{1}{sC}}{R_2} = -\frac{1}{sR_2C} \quad ; \quad \frac{V_{o3}}{V_{o2}} = -1 \Rightarrow V_{o3} = \frac{V_o}{sR_2C}$$

KCL at node 1, $\frac{V_i}{R_4} + \frac{V_o}{R_1} + \frac{V_o}{\frac{1}{sC}} + \frac{V_{o3}}{R_3} = 0 \Rightarrow \frac{V_i}{R_4} = -V_o\left(\frac{1}{R_1} + sC + \frac{1}{sR_2R_3C}\right) \Rightarrow \frac{V_o}{V_i} = \frac{-1/R_4}{\frac{1}{R_1} + sC + \frac{1}{sR_2R_3C}} = \frac{-1/R_4}{\frac{1}{R_1} + s\left(wC - \frac{1}{wR_2R_3C}\right)}$

→ Center frequency occurs at the point where $w_oC - \frac{1}{w_oR_2R_3C} = 0 \Rightarrow w_oC = \frac{1}{w_oR_2R_3C} \Rightarrow w_o^2 = \frac{1}{R_2R_3C^2} \Rightarrow f_o = \frac{1}{2\pi C\sqrt{R_2R_3}}$

Maximum voltage gain occurs at central frequency $\longrightarrow |A_v|_{max} = \frac{R_1}{R_4}$, $BW = \frac{1}{2\pi R_1C} \longrightarrow$ R_2 and R_3: f_o; R_1: BW , R_4: $|A_v|_{max}$

Assumption: $R_2 = R_3 = R$, $f_o = 2\ kHz \Rightarrow f_o = \frac{1}{2\pi RC} \Rightarrow R = \frac{1}{2\pi f_oC}$

Assumption: $|A_v|_{max} = 1 \Rightarrow |A_v|_{max} = \frac{R_1}{R_4} = 1 \Rightarrow R_1 = R_4$

Assumption: $C = 10\ nF \Rightarrow R = \frac{1}{2\pi(2\times10^3)(10\times10^{-9})} \Rightarrow R_2 = R_3 \cong 7.958\ k\Omega \approx 8\ k\Omega$

Assumption: To make sure the signal is attenuated well in 500 Hz and 10 kHz , we will assume the bandwidth to be BW = 200 Hz.

$$BW = \frac{1}{2\pi R_1C} \Rightarrow R_1 = \frac{1}{2\pi C\,BW} = \frac{1}{2\pi(10\times10^{-9})(200)} \Rightarrow R_1 = R_4 = 79.577\ k\Omega \approx 80\ k\Omega$$

Figure 6: The calculations for bandpass filter

Results

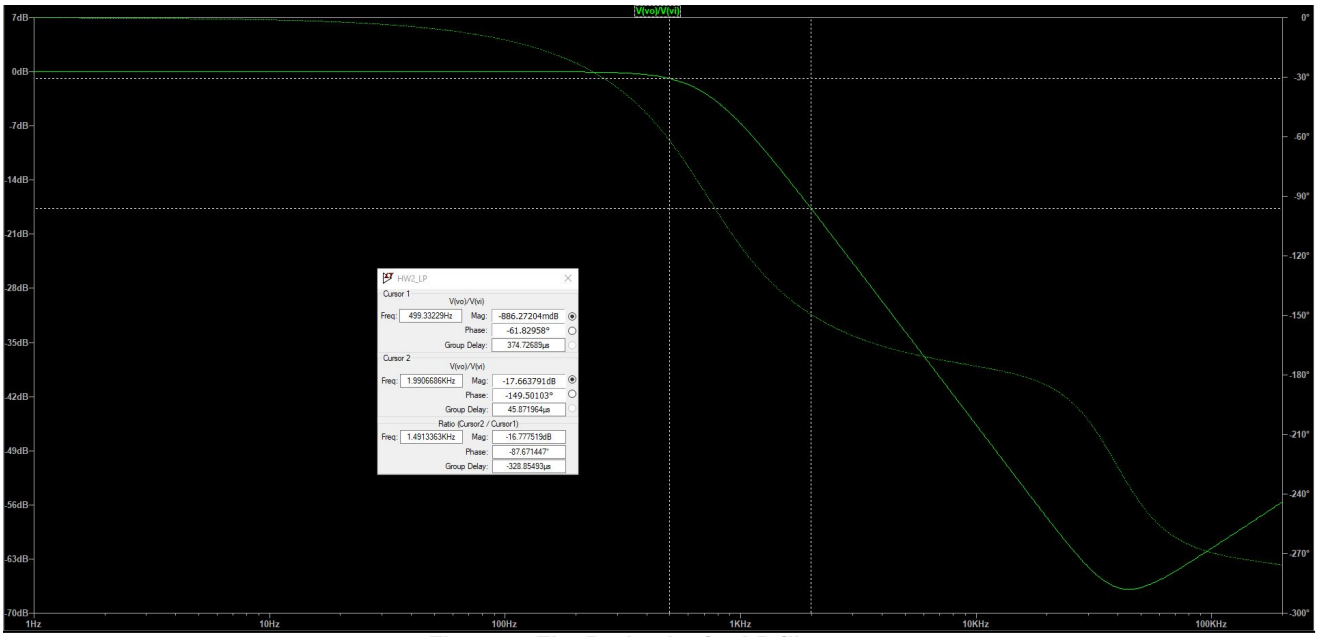

Figure 7: The Bode plot for LP filter

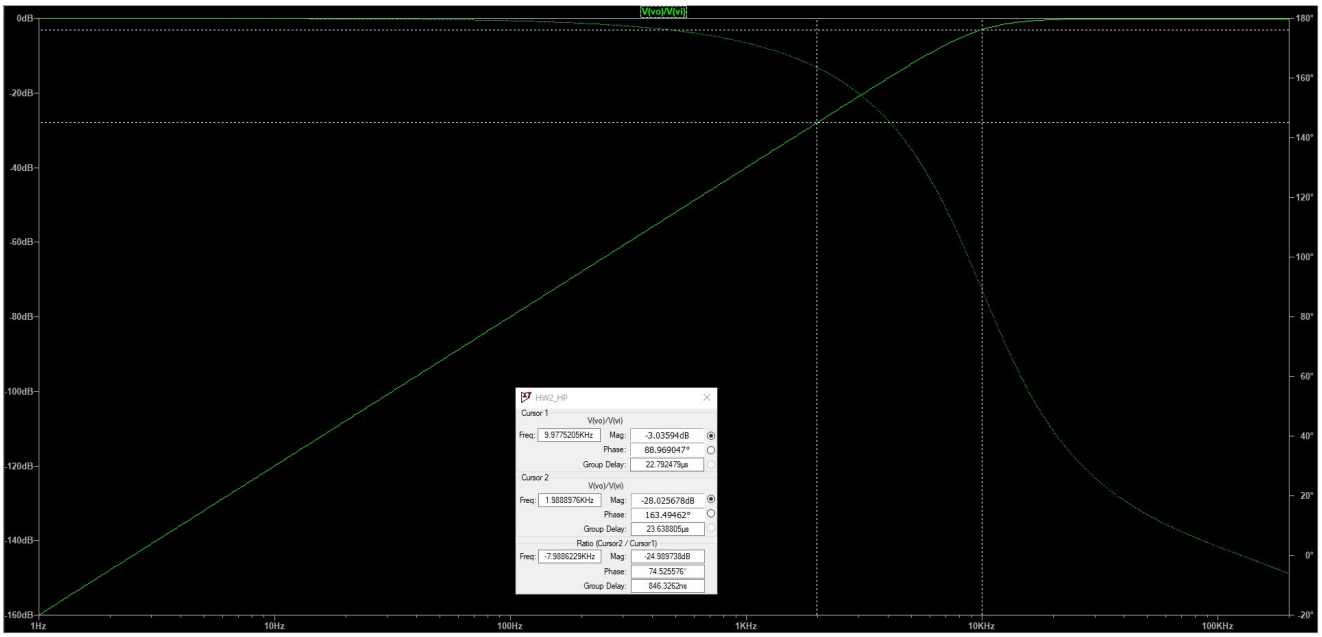

Figure 8: The Bode plot for HP filter

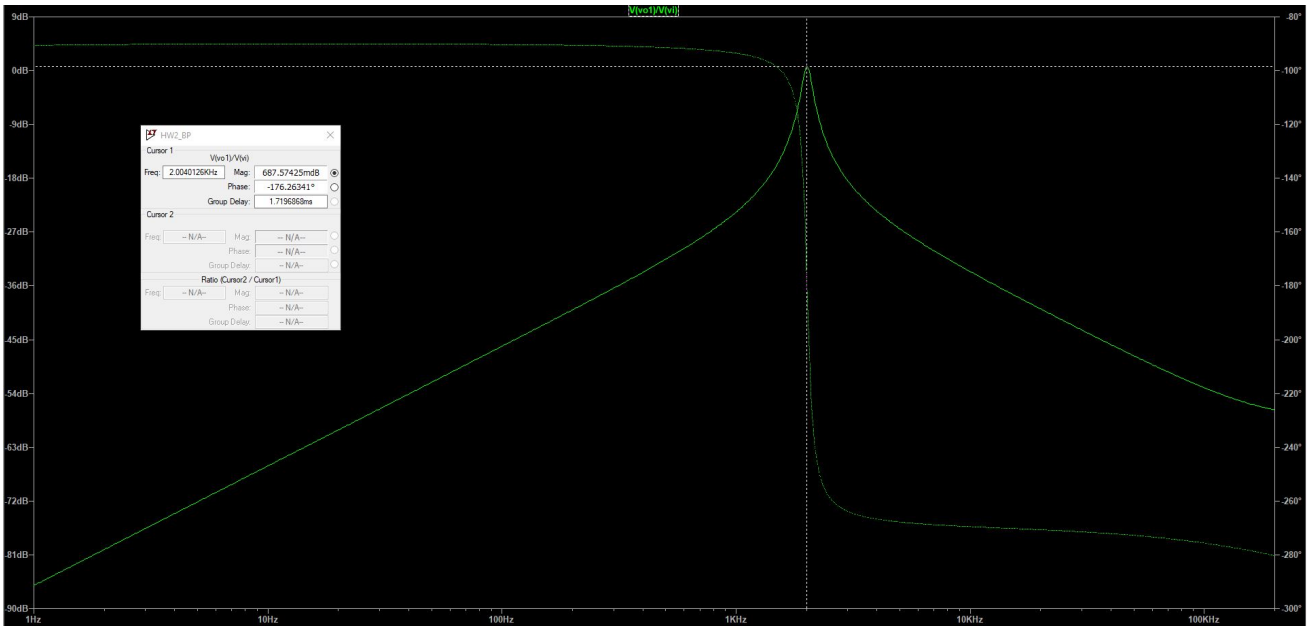

Figure 9: The Bode plot for bandpass filter

Commentary:

In this report, the filter types were selected correctly based on the frequency locations in x(t) a low-pass filter for the lowest component (500 Hz), a high-pass filter for the highest component (10 kHz), and a band-pass filter to extract the middle component (2 kHz). This choice matches the goal of passing the desired sinusoid while attenuating the others.

For the low-pass design, using a requirement such as “loss at 500 Hz < 1 dB” is a good approach because it turns the design goal into a clear numerical condition. The Bode plot of V(vo)/V(vi) confirms that 500 Hz stays in the passband and higher frequencies start to drop as expected. For the high-pass design, setting the cutoff near 10 kHz naturally results in about −3 dB at 10 kHz for a Butterworth response, which is expected behavior. The Bode plot also shows strong attenuation at 500 Hz and 2 kHz. For the band-pass circuit, it is important to measure the output at the correct node (e.g., vo1 for the band-pass stage). Also, choosing $R_5 = R_6$ keeps the final inverting stage at unity gain, preventing unintended amplification.

Overall, the AC sweep settings were appropriate for obtaining smooth Bode plots, and the simulation results are consistent with the expected behavior of second-order active filters.